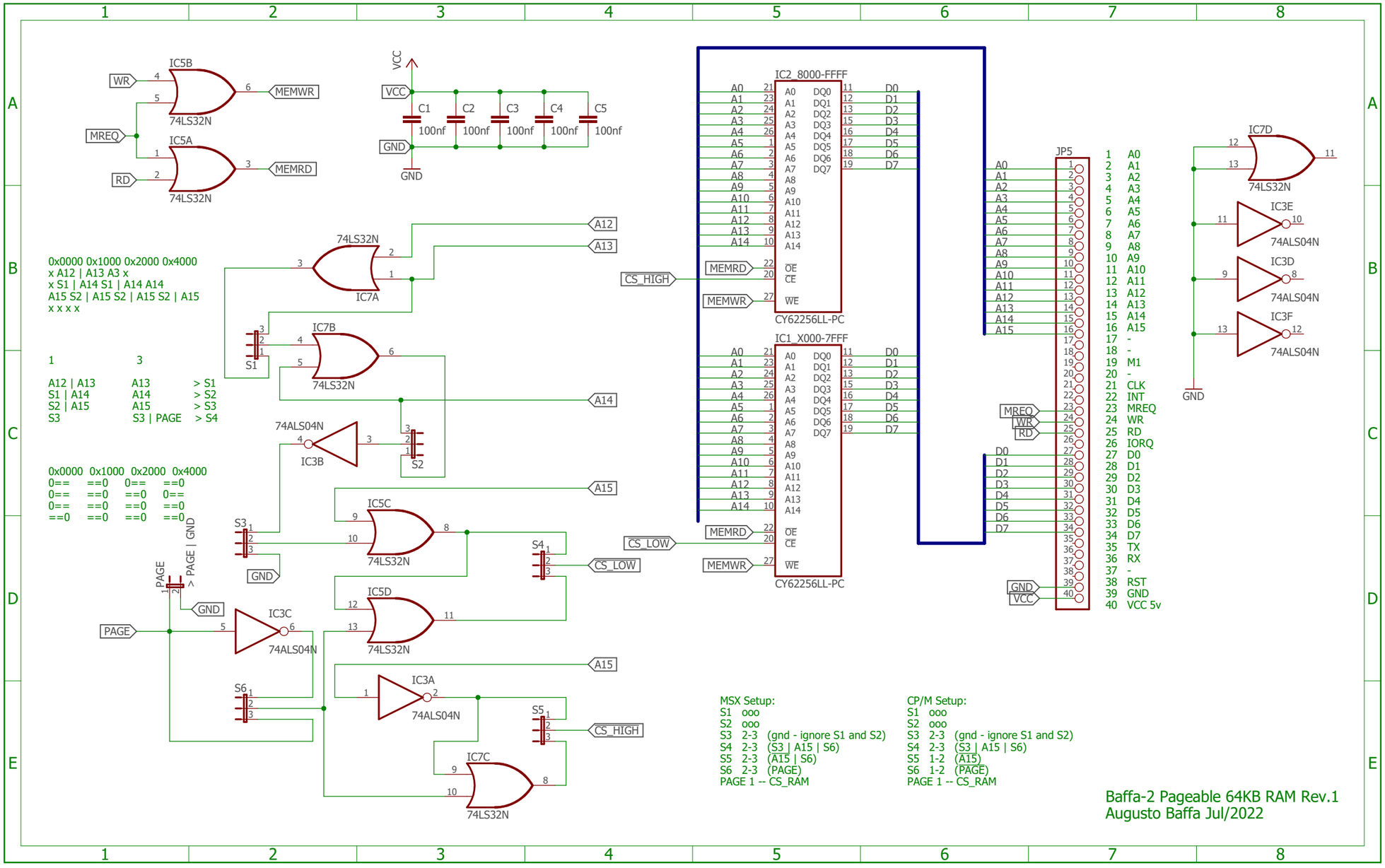
IC5B
74LS32N
IC5A
74LS32N
WR
MREQ
RD
MEMWR
MEMRD
VCC
GND
C1 100nf
C2 100nf
C3 100nf
C4 100nf
C5 100nf
IC2_8000-FFFF
CY62256LL-PC
IC1_X000-7FFF
CY62256LL-PC
CS_HIGH
CS_LOW
A12
A13
A14
A15
IC7A
74LS32N
IC7B
74LS32N
S1
74ALS04N
IC3B
S2
IC5C
74LS32N
S3
S4
IC5D
74LS32N
IC3C
74ALS04N
PAGE
S6
IC3A
74ALS04N
S5
IC7C
74LS32N
JP5
IC7D
74LS32N
IC3E
74ALS04N
IC3D
74ALS04N
IC3F
74ALS04N
0x0000 0x1000 0x2000 0x4000
x A12 | A13 A3 x
x S1 | A14 S1 | A14 A14
A15 S2 | A15 S2 | A15 S2 | A15
x x x x
1 3
A12 | A13 A13 > S1
S1 | A14 A14 > S2
S2 | A15 A15 > S3
S3 S3 | PAGE > S4
0x0000 0x1000 0x2000 0x4000
0== ==0 0== ==0
0== ==0 ==0 0==
0== ==0 ==0 ==0
==0 ==0 ==0 ==0
> PAGE | GND
MSX Setup:
S1 ooo
S2 ooo
S3 2-3 (gnd - ignore S1 and S2)
S4 2-3 (S3 | A15 | S6)
S5 2-3 (A15 | S6)
S6 2-3 (PAGE)
PAGE 1 -- CS_RAM
CP/M Setup:
S1 ooo
S2 ooo
S3 2-3 (gnd - ignore S1 and S2)
S4 2-3 (S3 | A15 | S6)
S5 1-2 (A15)
S6 1-2 (PAGE)
PAGE 1 -- CS_RAM
Baffa-2 Pageable 64KB RAM Rev.1
Augusto Baffa Jul/2022