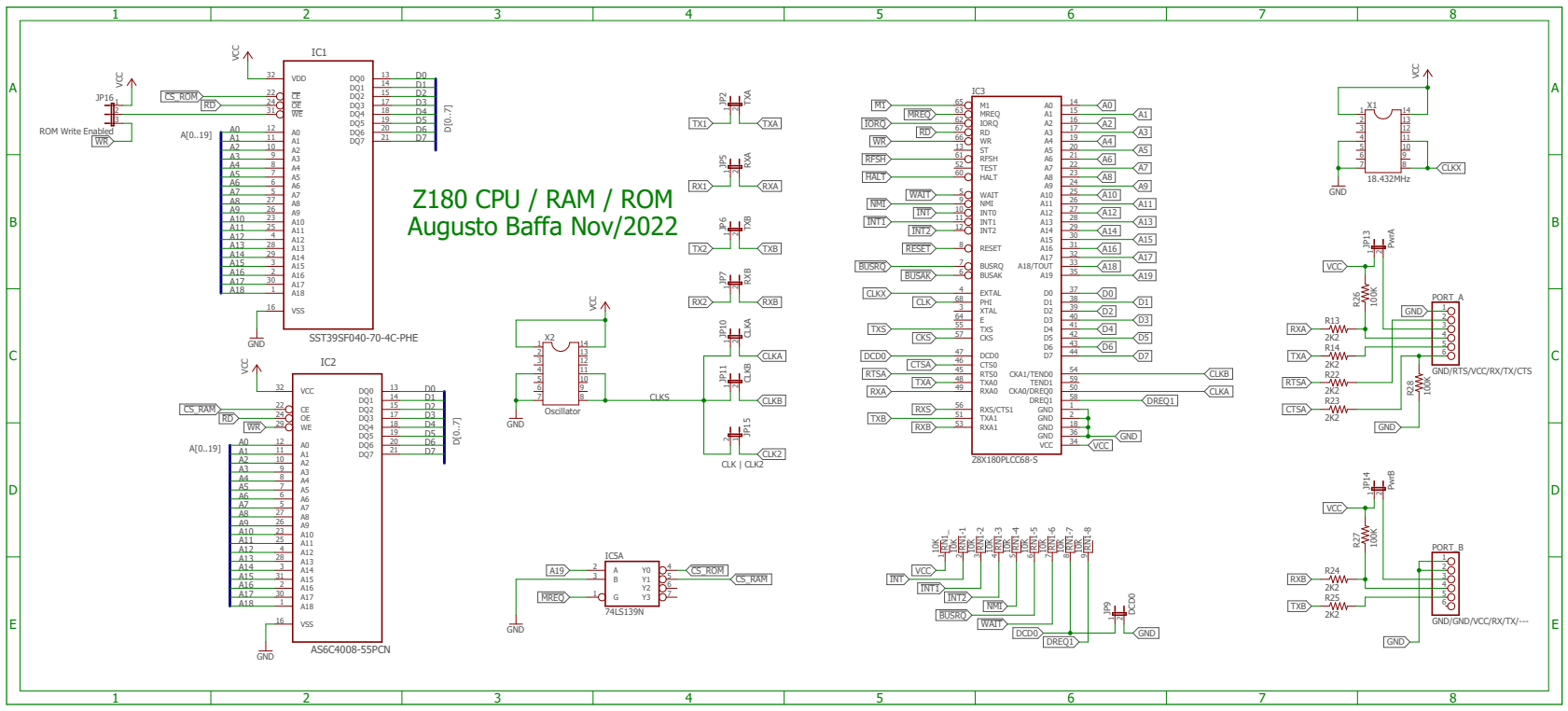
Z180 CPU / RAM / ROM
Augusto Baffa Nov/2022
IC1
SST39SF040-70-4C-PHE
IC2
AS6C4008-55PCN
IC3
Z8X180PLCC68-S
IC5A
74LS139N
Oscillator
18.432MHz
PORT_A
GND/RTS/VCC/RX/TX/CTS
PORT_B
GND/GND/VCC/RX/TX/---
ROM Write Enabled

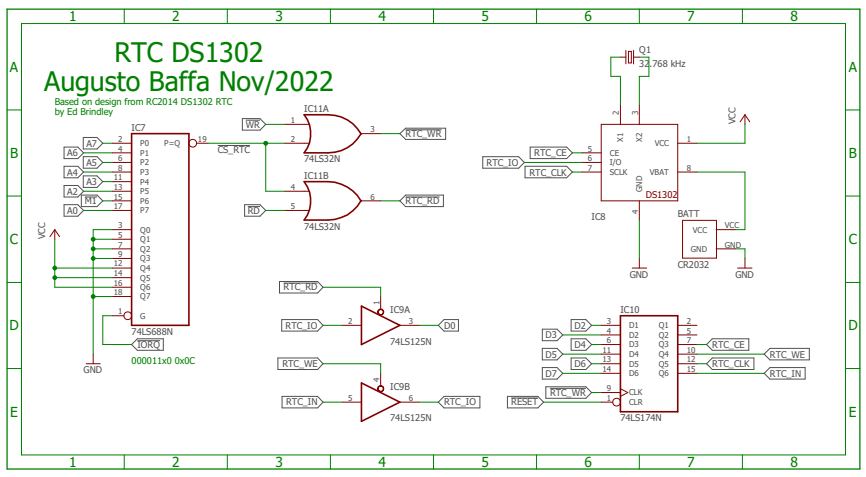
RTC DS1302
Augusto Baffa Nov/2022
Based on design from RC2014 DS1302 RTC
by Ed Brindley
IC7
74LS688N
000011x0 0x0C
IC11A
IC11B
74LS32N
IC8
DS1302
CR2032
IC9A
IC9B
74LS125N
IC10
74LS174N

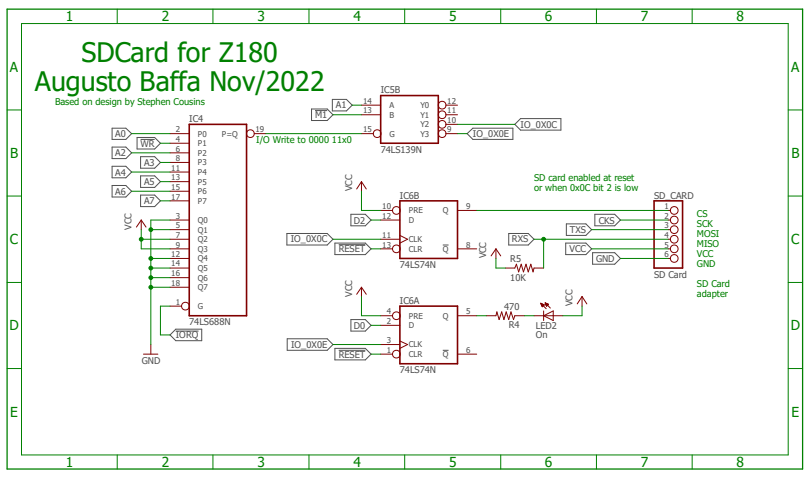
SDCard for Z180
Augusto Baffa Nov/2022
Based on design by Stephen Cousins
IC4
74LS688N
I/O Write to 0000 11x0
IC5B
74LS139N
IC6B
74LS74N
IC6A
74LS74N
SD card enabled at reset
or when 0x0C bit 2 is low
SD_CARD
SD Card
SD Card
adapter
LED2
On

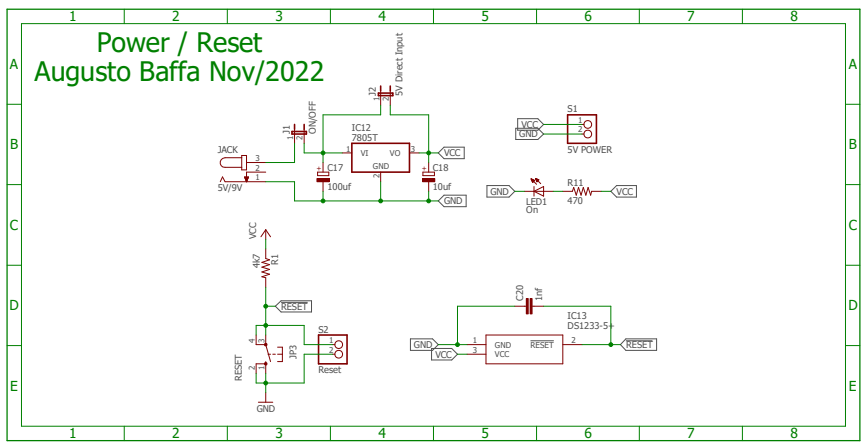
Power / Reset
Augusto Baffa Nov/2022
5V Direct Input
IC12
7805T
5V POWER
LED1
On
IC13
DS1233-5+
Reset

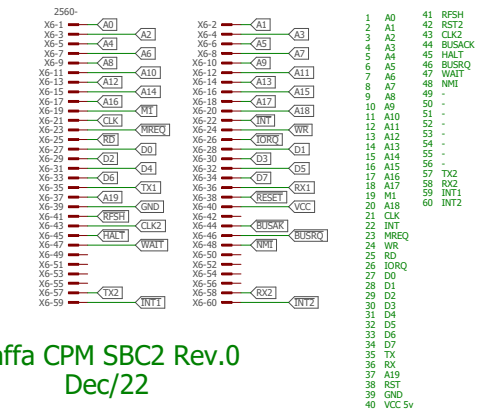
Baffa CPM SBC2 Rev.0
Dec/22

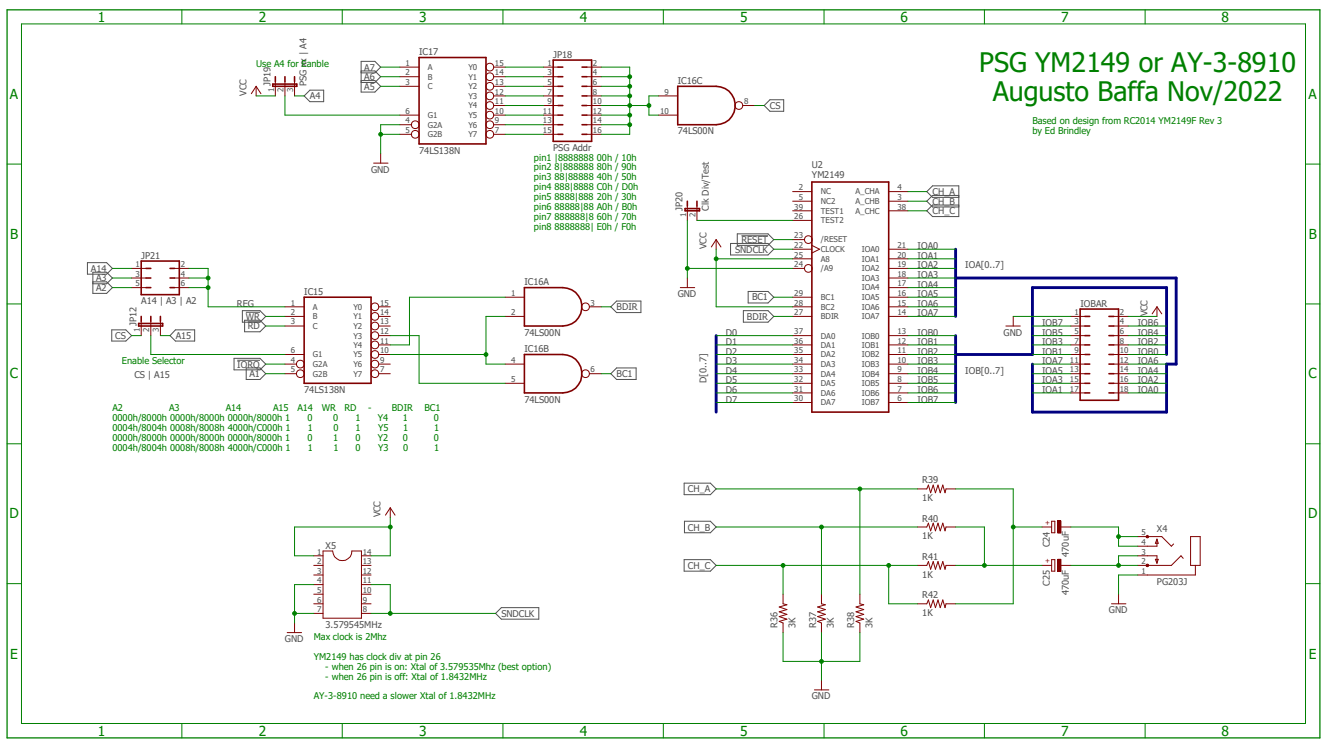
PSG YM2149 or AY-3-8910
Augusto Baffa Nov/2022
Based on design from RC2014 YM2149F Rev 3
by Ed Brindley
IC17
74LS138N
IC16C
74LS00N
IC15
74LS138N
IC16A
IC16B
U2
YM2149
IOBAR
IC9C
IC9D
IC11C
IC11D
IC16D
3.579545MHz
Max clock is 2Mhz
YM2149 has clock div at pin 26
- when 26 pin is on: Xtal of 3.579535Mhz (best option)
- when 26 pin is off: Xtal of 1.8432MHz
AY-3-8910 need a slower Xtal of 1.8432MHz

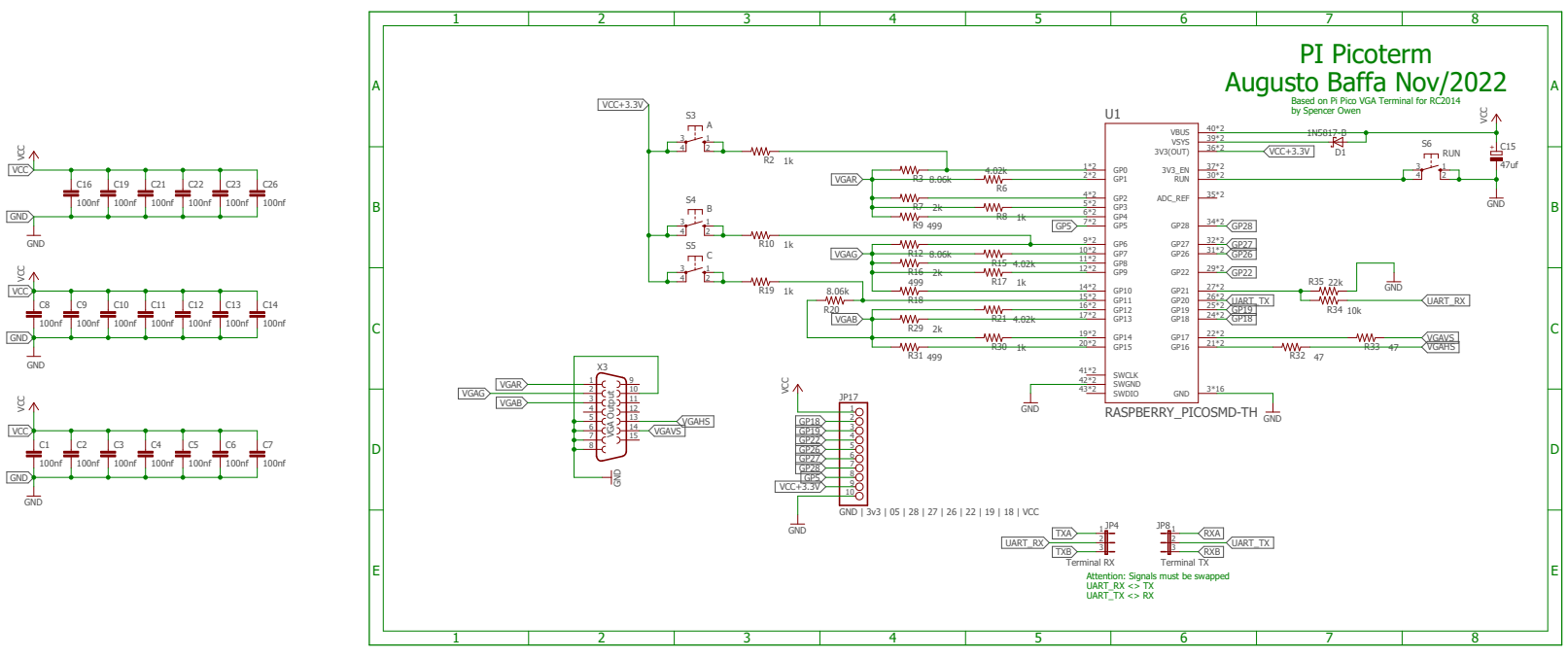
PI Picoterm
Augusto Baffa Nov/2022
Based on Pi Pico VGA Terminal for RC2014
by Spencer Owen
U1
RASPBERRY_PICOSMD-TH
X3
JP17
Terminal RX
Terminal TX
Attention: Signals must be swapped
UART_RX <> TX
UART_TX <> RX